DRAWING NUMBER
D 2202 9000–017

T6 3 & 4 POLE
SIDE VIEW
WITH FLANGE

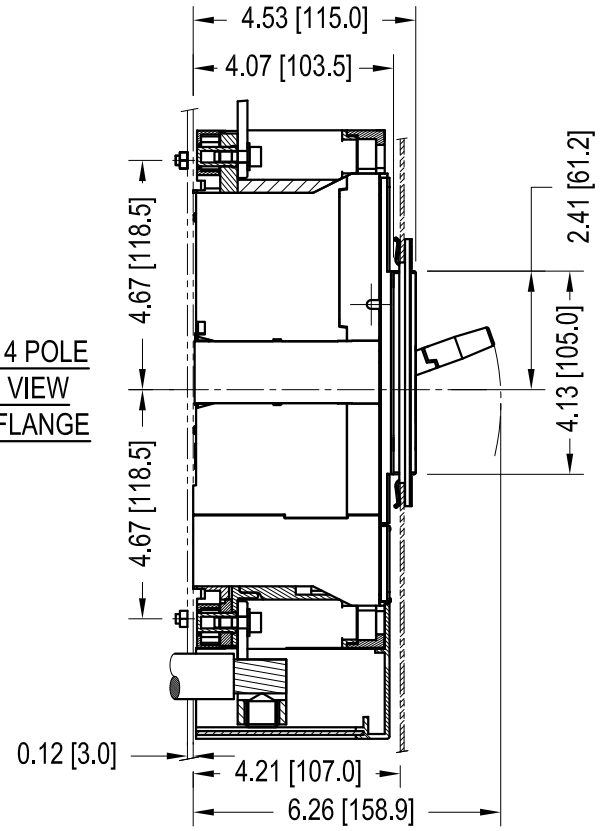

T6 3 POLE
FRONT VIEW

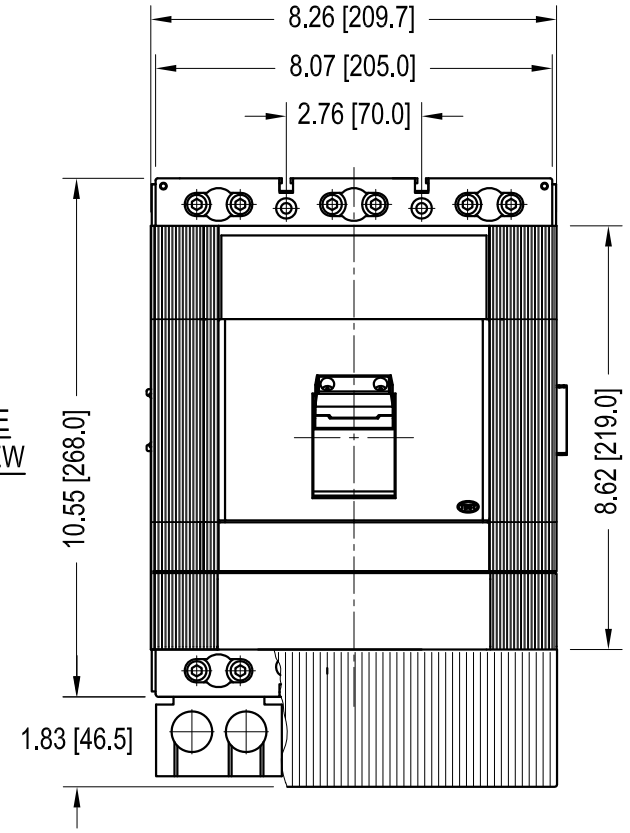

T6 3 POLE
DRILLING
FRONT VIEW

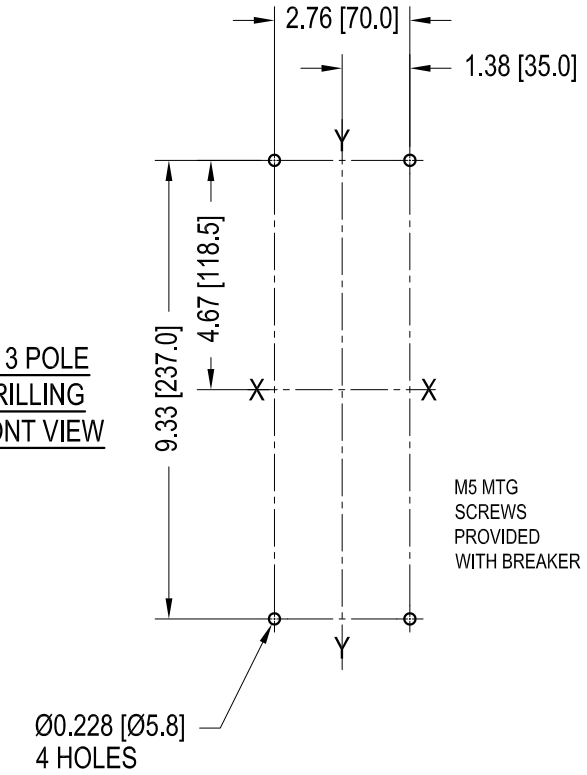

T6 3 & 4 POLE
DOOR CUTOUT

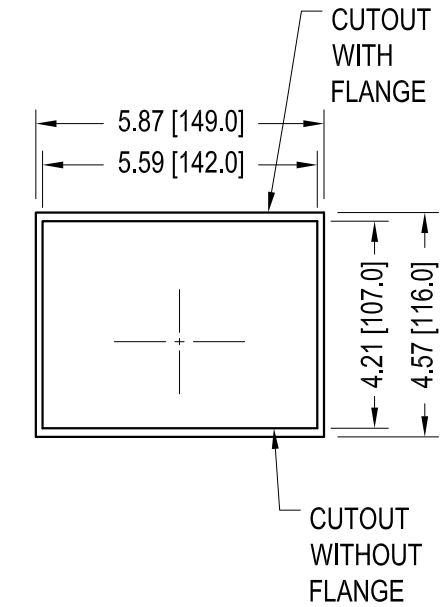

S6 3 & 4 POLE
SIDE VIEW
WITH FLANGE

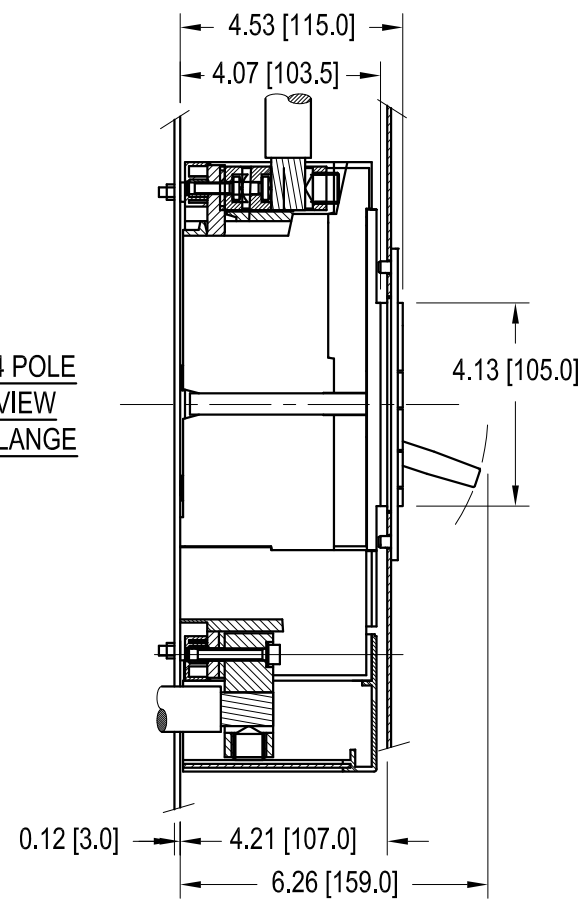

S6 3 POLE
FRONT VIEW

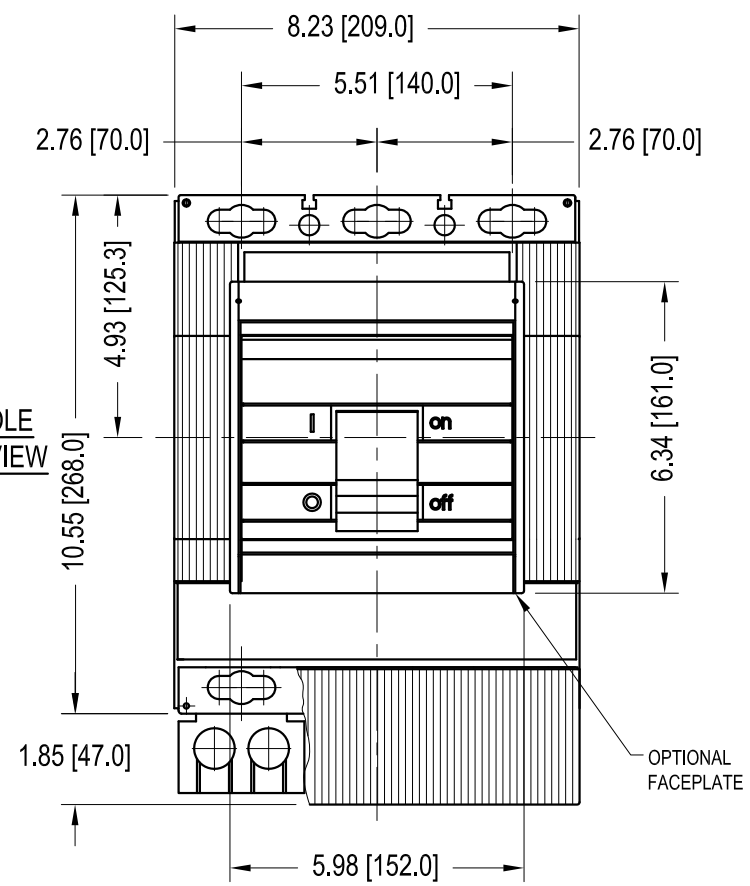

S6 3 POLE
DRILLING
FRONT VIEW

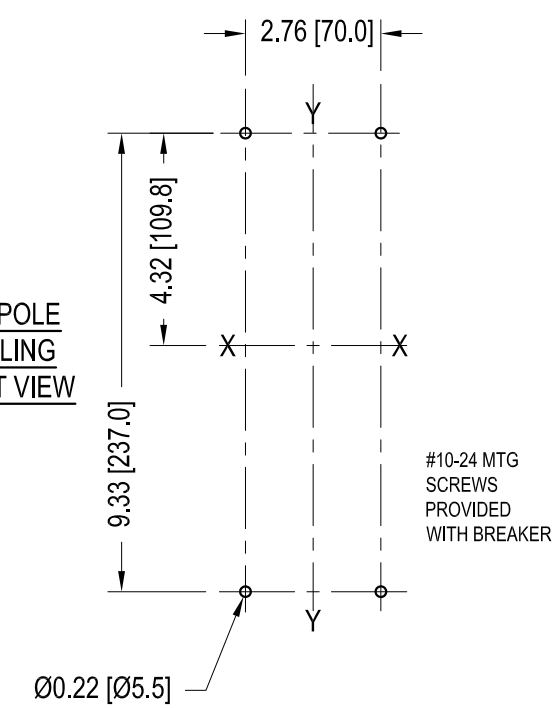

S6 3 & 4 POLE
DOOR CUTOUT

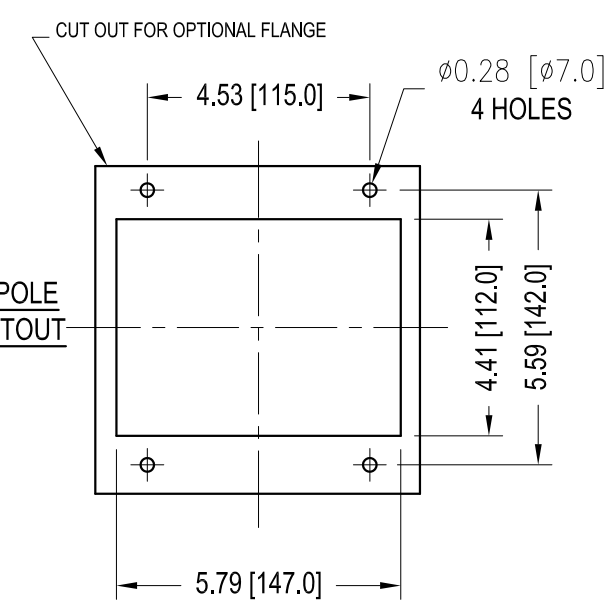

CUST

REV. LET.	REVISIONS	DATE	REV OR APPD BY
B	ADDED TERMINAL COVER TO T6	5/7/08	TSP

THIS DRAWING IS THE PROPERTY OF ABB Inc. AND CONTAINS PROPRIETARY AND CONFIDENTIAL INFORMATION WHICH MUST NOT BE DUPLICATED, USED OR DISCLOSED OTHER THAN EXPRESSLY AUTHORIZED BY ABB Inc.

ABB Inc.

DATE 4–2–2008
DRAWN BY DLM
CHK'D
PROJECT NO.
SHEET 1 OF 1
REV. B
SIZE B
TITLE TMAX T6 vs ISOMAX S6 DIMENSIONS & MOUNTING
DRAWING NUMBER D 2202 9000–017

DRAWING NUMBER
D 2202 9000–017