DRAWING NUMBER
D 2202 9000-016

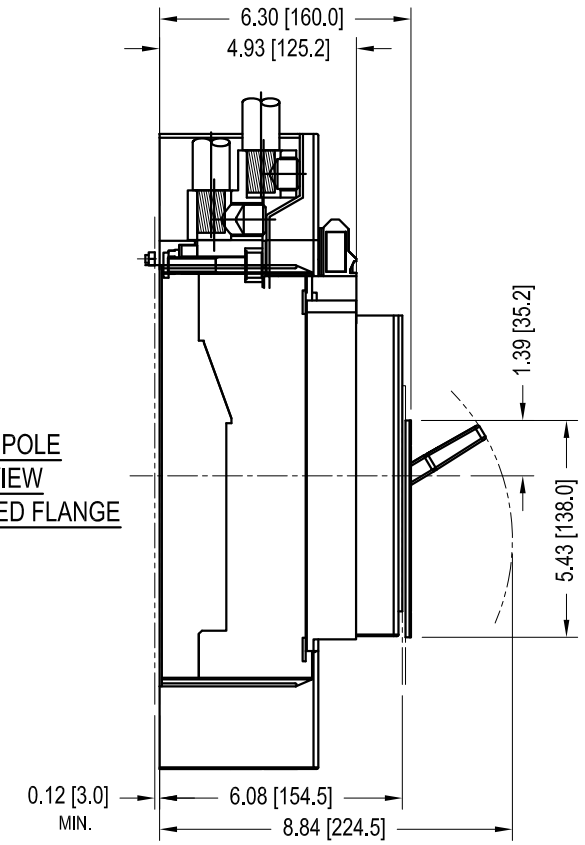

T7 3 & 4 POLE
SIDE VIEW
WITH REDUCED FLANGE

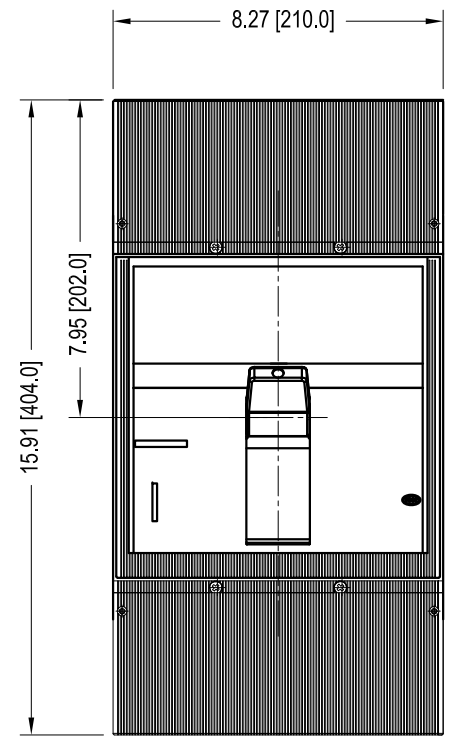

T7 3 POLE
FRONT VIEW

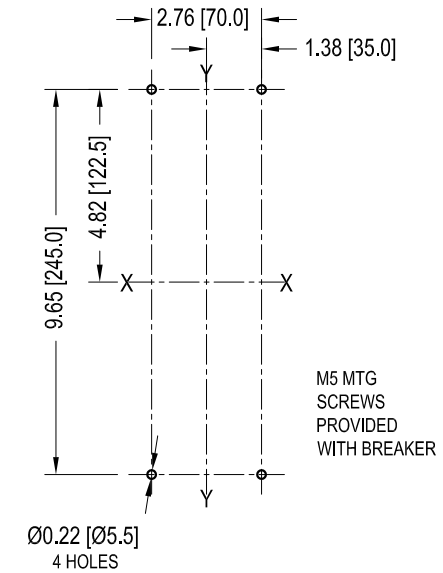

T7 3 POLE
DRILLING
FRONT VIEW

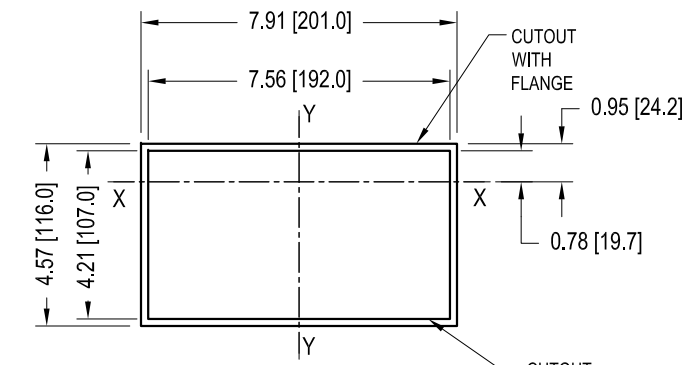

T7 3 & 4 POLE REDUCED
CUTOUT FOR DOOR
COMPARTMENT

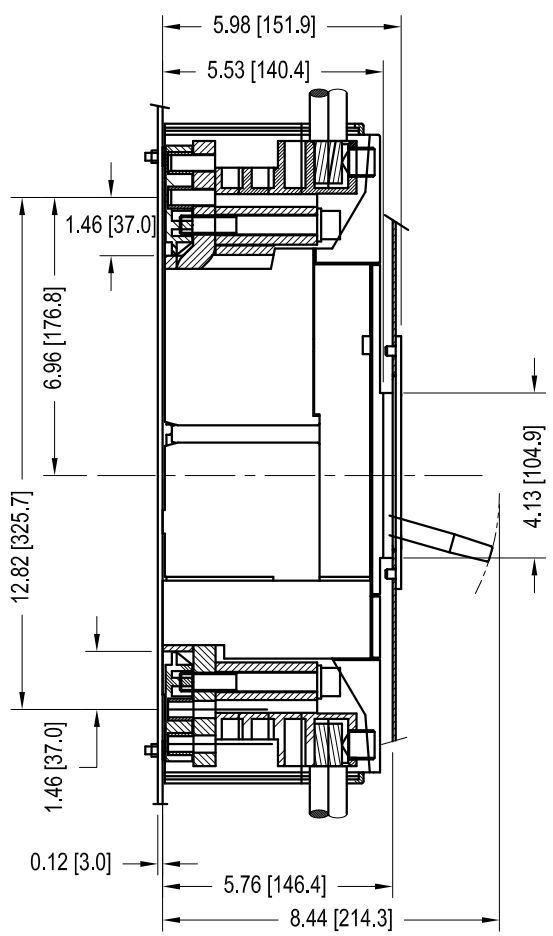

S7 3 & 4 POLE
SIDE VIEW
WITH DOOR FLANGE

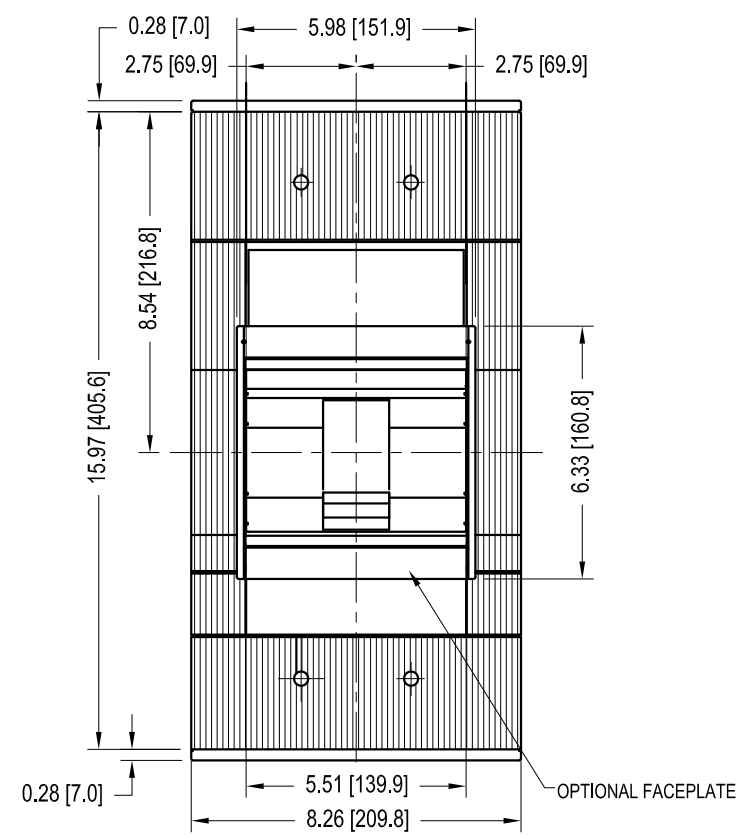

S7 3 POLE
FRONT VIEW

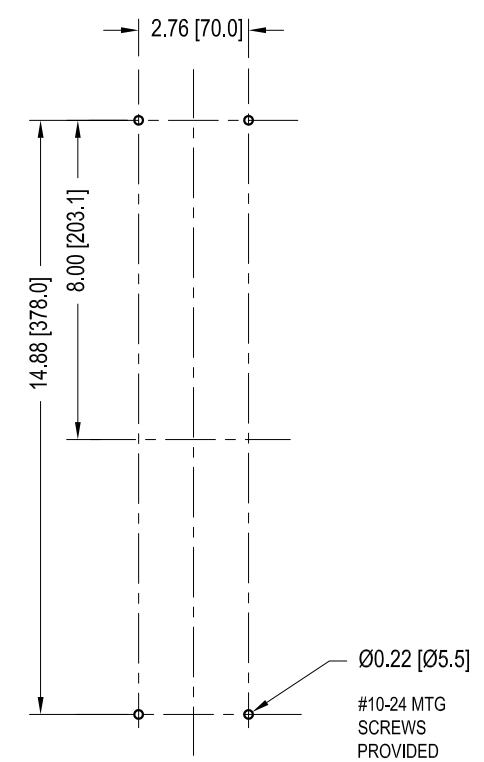

S7 3 POLE
DRILLING
FRONT VIEW

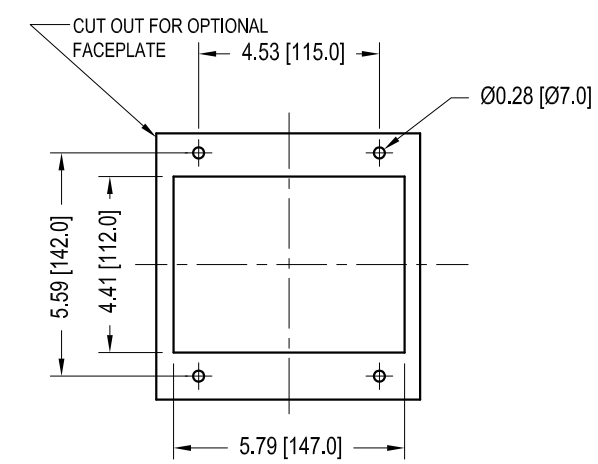

S7 3 & 4 POLE
CUTOUT FOR DOOR
COMPARTMENT

CUST

REV. LET.	REVISIONS	DATE	REV OR APPD BY
B	ADDED TERMINAL COVER TO T7	5/9/08	TSP

THIS DRAWING IS THE PROPERTY OF ABB Inc. AND CONTAINS PROPRIETARY AND CONFIDENTIAL INFORMATION WHICH MUST NOT BE DUPLICATED, USED OR DISCLOSED OTHER THAN EXPRESSLY AUTHORIZED BY ABB Inc.

ABB Inc.

DATE 4-2-2008
DRAWN BY DLM
CHK'D
PROJECT NO.
SHEET 1 OF 1

REV. B
SIZE B

TITLE TMAX T7 vs ISOMAX S7 DIMENSIONS & MOUNTING

DRAWING NUMBER D 2202 9000-016

DRAWING NUMBER
D 2202 9000-016